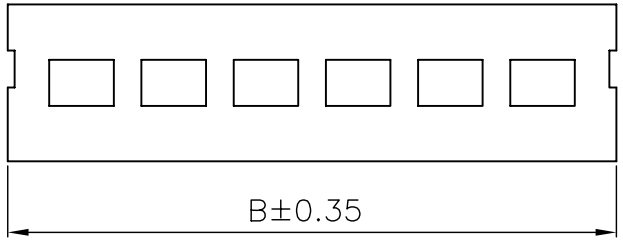

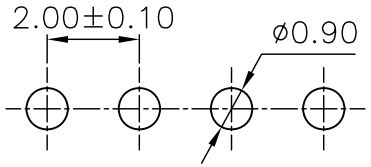

PCB LAYOUT

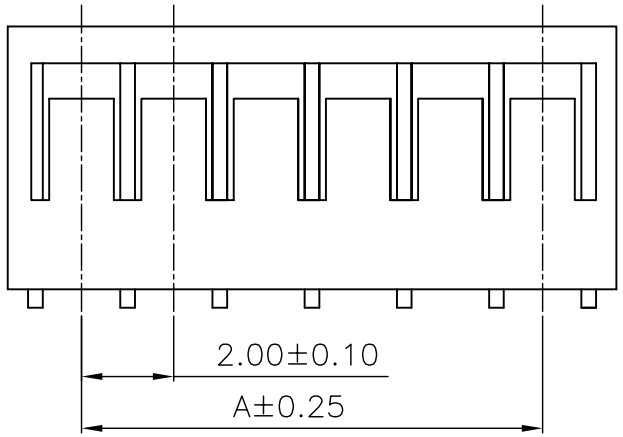

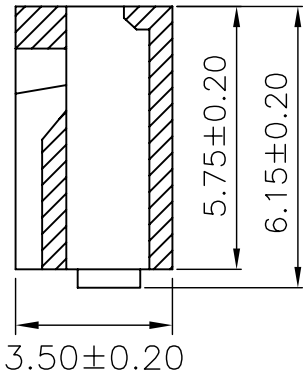

SPECIFICATIONS

Voltage Rating: 250V AC/DC
Current rating: 2A AC/DC
Withstanding Voltage: 800V AC/minute
Insulation resistance: 1,000MΩmin
Temperature range: -25° C- +85° C
Contact Resistance: 20mΩmax

HOUSING

Part No: SCT2003HV-XXP
Poles: 2-16
Material: Nylon 66 UL94V-2

PART NO.	Dimension	
	A	B
SCT2003HV-02	2.00	5.20
SCT2003HV-03	4.00	7.20
SCT2003HV-04	6.00	9.20
SCT2003HV-05	8.00	11.20
SCT2003HV-06	10.00	13.20
SCT2003HV-07	12.00	15.20
SCT2003HV-08	14.00	17.20
SCT2003HV-09	16.00	19.20
SCT2003HV-10	18.00	21.20
SCT2003HV-11	20.00	23.20
SCT2003HV-12	22.00	25.20
SCT2003HV-13	24.00	27.20
SCT2003HV-14	26.00	29.20
SCT2003HV-15	28.00	31.20
SCT2003HV-16	30.00	33.20

REV	DATE	MODIFICATION DESCRIPTION	CHANGE	APPROVE
0	05/12/27	NEW	———	———

OPERATION	
~ 10	±0.15
20 ~ 30	±0.30
30 ~	±0.50
Angle	± 2°
DIM	TOL

DRAW	Judy.Huang	2006/05/02
DESIGN		
CHECK	Micky.Liu	2006/05/02
APPROVE	Hellen.Li	2006/05/02

SCALE	
UNIT	mm
SIZE	A4
SHEET	1/1
PROJ.	

SCONDAR 森康达电子有限公司
SCONDAR ELECTRONIC LIMITED

PART NO.	SCT2003HV-XXP
TITLE:	SAN2.0 180C HOUSING
DRAWING NO.	SCT2003