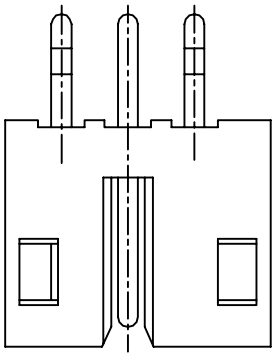

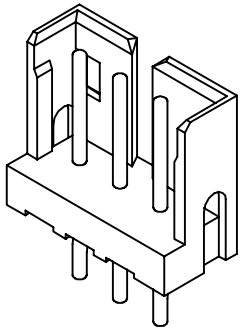

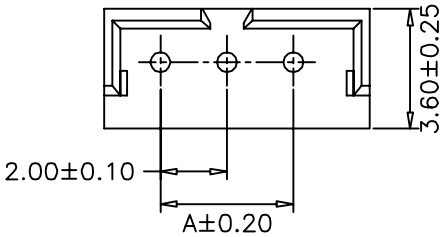

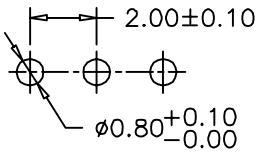

P.C.B LAYOUT

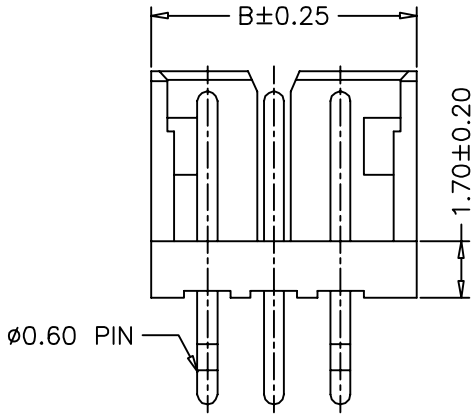

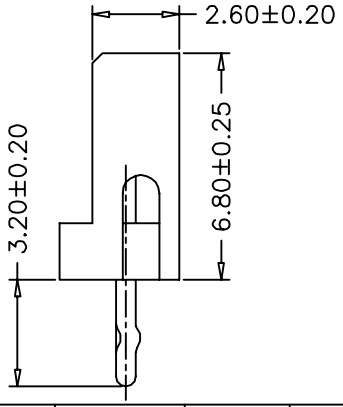

SPECIFICATIONS

Voltage Rating: 100V AC/DC
Current Rating: 1A AC/DC
Withstanding Voltage: 800V AC/minute
Insulation Resistance: 1,000MΩ min.
Temperature Range: -25° C - +85° C
Contact Resistance: 20mΩ max

HOUSING

Part No: SCT2007WV-XXP
Poles: 2-15
Material: Nylon 66, UL94V-0
Pin: Brass, Tin plated

PART NO.	Dimensions	
	A	B
SCT2007WV-02P	2.00	5.96
SCT2007WV-03P	4.00	7.96
SCT2007WV-04P	6.00	9.96
SCT2007WV-05P	8.00	11.96
SCT2007WV-06P	10.00	13.96
SCT2007WV-07P	12.00	15.96
SCT2007WV-08P	14.00	17.96
SCT2007WV-09P	16.00	19.96
SCT2007WV-10P	18.00	21.96
SCT2007WV-11P	20.00	23.96
SCT2007WV-12P	22.00	25.96
SCT2007WV-13P	24.00	27.96
SCT2007WV-14P	26.00	29.96
SCT2007WV-15P	28.00	31.96

REV	DATE	MODIFICATION DESCRIPTION	CHANGE	APPROVE
0	05/12/27	NEW	———	———

OPERATION				
		DRAW	Judy.Huang	2006/05/02
~ 10	±0.15	DESIGN		
20 ~ 30	±0.30			
30 ~	±0.50	CHECK	Micky.Liu	2006/05/02
Angle	± 2°	APPROVE	Hellen.Li	2006/05/02
DIM	TOL			

SCALE	
UNIT	mm
SIZE	A4
SHEET	1/1
PROJ.	

SCONDAR 森康达电子有限公司
SCONDAR ELECTRONIC LIMITED

PART NO.	SCT2007WV-XXP
TITLE:	AMP2.0 180C WAFER
DRAWING NO.	SCT2007