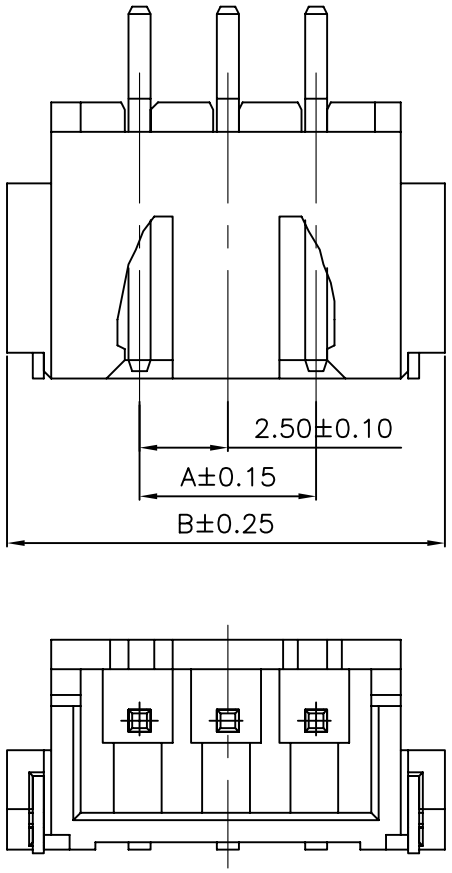

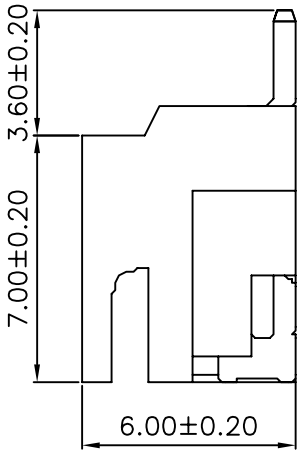

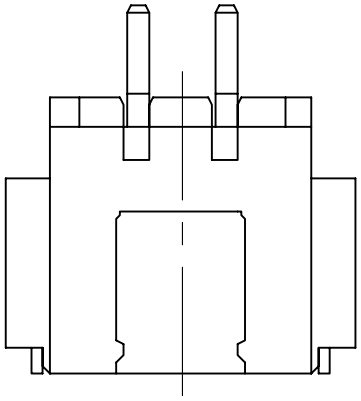

2P

SPECIFICATIONS

Voltage Rating: 250V AC/DC
Current Rating: 3A AC/DC
Withstanding Voltage: 1000V AC/minute
Insulation Resistance: 1000MΩ min.
Temperature Range: -25° C - +85° C
Contact Resistance: 20mΩ max

WAFER
Part No: SCT2501WR-S-XXPB
Poles: 2-16
Material: Nylon 9T, UL94V-0
Pin: Brass, Tin plated

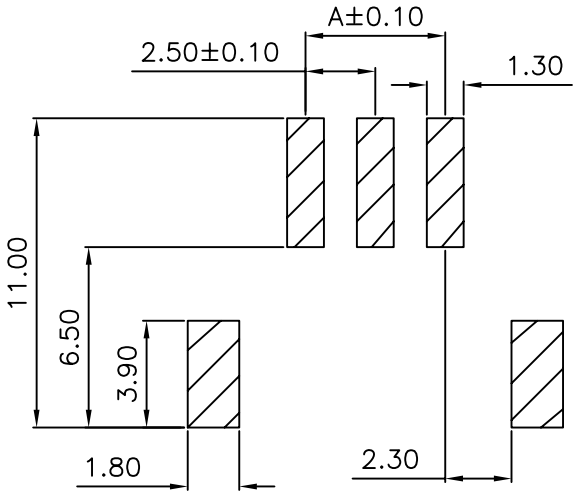

PCB LAYOUT

PART NO	DIMENSION	
	A	B
SCT2501WR-S-02PB	2.50	10.00
SCT2501WR-S-03PB	5.00	12.50
SCT2501WR-S-04PB	7.50	15.00
SCT2501WR-S-05PB	10.00	17.50
SCT2501WR-S-06PB	12.50	20.00
SCT2501WR-S-07PB	15.00	22.50
SCT2501WR-S-08PB	17.50	25.00
SCT2501WR-S-09PB	20.00	27.50
SCT2501WR-S-10PB	22.50	30.00
SCT2501WR-S-11PB	25.00	32.50
SCT2501WR-S-12PB	27.50	35.00
SCT2501WR-S-13PB	30.00	37.50
SCT2501WR-S-14PB	32.50	40.00
SCT2501WR-S-15PB	35.00	42.50
SCT2501WR-S-16PB	37.50	45.00

REV	DATE	MODIFICATION DESCRIPTION	CHANGE	APPROVE
0	05/12/27	NEW		

OPERATION	
~ 10	±0.15
20 ~ 30	±0.30
30 ~	±0.50
Angle	± 2°
DIM	TOL

DRAW	CHENA	05/12/27
DESIGN		
CHECK	MICKY	05/12/28
APPROVE	HELLEN	05/12/28

SCALE	
UNIT	mm
SIZE	A4
SHEET	1/1
PROJ.	

SCONDAR 森康达电子有限公司
SCONDAR ELECTRONIC LIMITED

PART NO.	SCT2501WR-S-XXPB
TITLE:	XH2.5 90C SMT WAFER
DRAWING NO.	SCT2501