SPECIFICATIONS
Voltage Rating: 250V AC/DC
Current Rating: 3A AC/DC
Withstanding Voltage: 800V AC/minute
Insulation Resistance: 1000MΩ min.
Temperature Range: -25° C - +85° C
Contact Resistance: 20mΩ max

HOUSING
Part No: SCT2503H-XXP
Poles: 2-20
Material: Nylon 66, UL94V-2

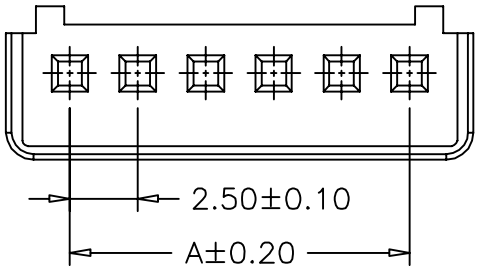

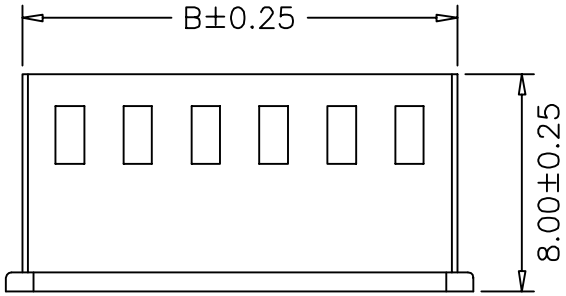

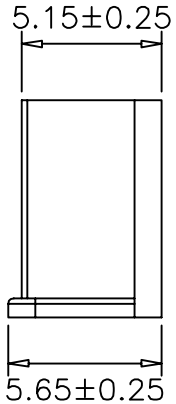

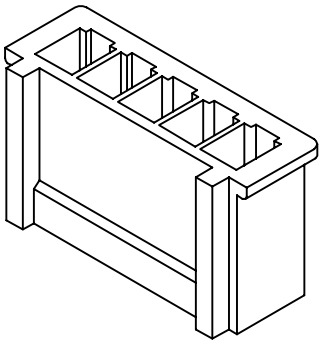

PART NO.	Dimensions	
	A	B
SCT2503H-02P	2.50	6.00
SCT2503H-03P	5.00	8.50
SCT2503H-04P	7.50	11.00
SCT2503H-05P	10.00	13.50
SCT2503H-06P	12.50	16.00
SCT2503H-07P	15.00	18.50
SCT2503H-08P	17.50	21.00
SCT2503H-09P	20.00	23.50
SCT2503H-10P	22.50	26.00
SCT2503H-11P	25.00	28.50
SCT2503H-12P	27.50	31.00
SCT2503H-13P	30.00	33.50
SCT2503H-14P	32.50	36.00
SCT2503H-15P	35.00	38.50
SCT2503H-16P	37.50	41.00
SCT2503H-17P	40.00	43.50
SCT2503H-18P	42.50	46.00
SCT2503H-19P	45.00	48.50
SCT2503H-20P	47.50	51.00

REV	DATE	MODIFICATION DESCRIPTION	CHANGE	APPROVE
0	05/12/27	NEW	———	———

OPERATION	
~ 10	±0.15
20 ~ 30	±0.30
30 ~	±0.50
Angle	± 2°
DIM	TOL

DRAW	CHENA	05/12/27
DESIGN		
CHECK	MICKY	05/12/28
APPROVE	HELLEN	05/12/28

SCALE	
UNIT	mm
SIZE	A4
SHEET	1/1
PROJ.	

SCONDAR 森康达电子有限公司
SCONDAR ELECTRONIC LIMITED

PART NO.	SCT2503H-XXP
TITLE:	Dupont 2.5 HOUSING
DRAWING NO.	SCT2503