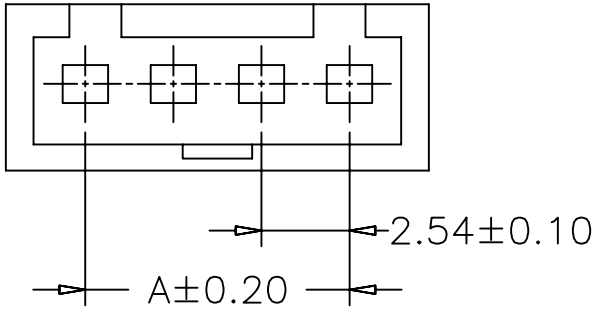


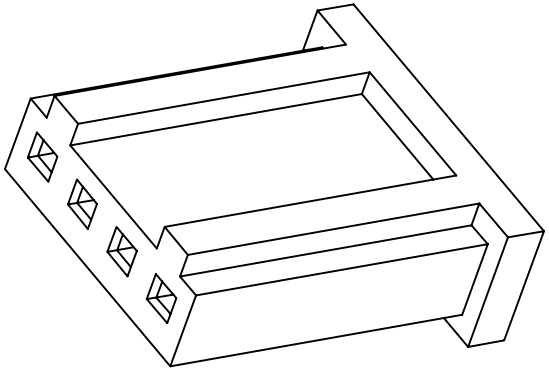

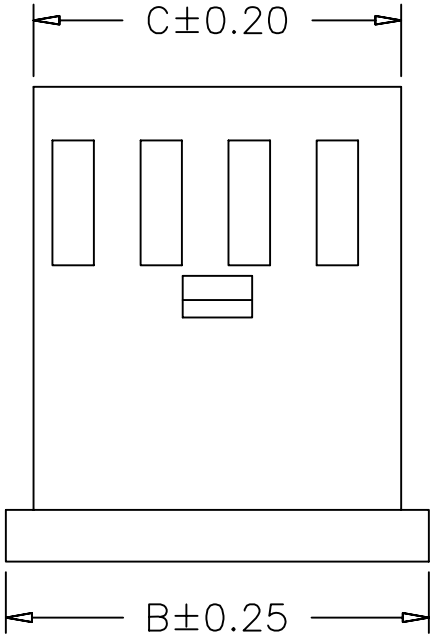


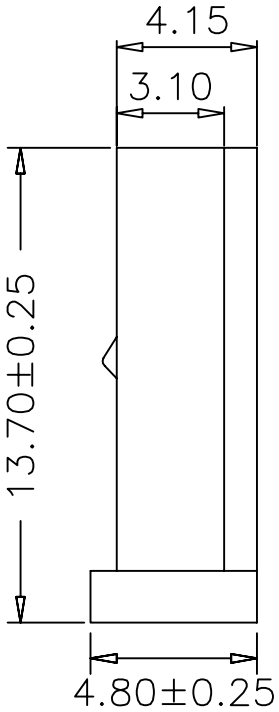


SPECIFICATIONS
Voltage Rating: 250V AC/DC
Current Rating: 3A AC/DC
Withstanding Voltage: 1000V AC/minute
Insulation Resistance: 1000MΩ min.
Temperature Range: -25° C - +85° C
Contact Resistance: 20mΩ max

HOUSING
Part No: SCT2542H-XXP
Poles: 2, 4, 6, 8P
Material: Nylon 66, UL94V-0

| PART NO. | Dimensions | | |
|---|---|---|---|
| | A | B | C |
| SCT2542H-02P | 2.54 | 7.10 | 5.60 |
| SCT2542H-03P | 5.08 | 9.64 | 8.14 |
| SCT2542H-04P | 7.62 | 12.18 | 10.68 |
| SCT2542H-05P | 10.16 | 14.72 | 13.22 |
| ⋮ | ⋮ | ⋮ | ⋮ |
| SCT2542H-20P | 48.26 | 52.82 | 51.32 |
| SCT2542H-21P | 50.80 | 55.36 | 53.86 |
| SCT2542H-22P | 53.34 | 57.90 | 56.40 |

| REV | DATE | MODIFICATION DESCRIPTION | CHANGE | APPROVE |
|---|---|---|---|---|
| 0 | 05/12/27 | NEW | | |

| OPERATION | |
|---|---|
| ~ 10 | ±0.15 |
| 20 ~ 30 | ±0.30 |
| 30 ~ | ±0.50 |
| Angle | ± 2° |
| DIM | TOL |

| | | |
|---|---|---|
| DRAW | CHENA | 2006.08.12 |
| DESIGN | | |
| CHECK | MICKY | 2006.08.12 |
| APPROVE | HELLEN | 2006.08.12 |

| | |
|---|---|
| SCALE | |
| UNIT | mm |
| SIZE | A4 |
| SHEET | 1/1 |
| PROJ. | |

SCONDAR 森康达电子有限公司 SCONDAR ELECTRONIC LIMITED

| | |
|---|---|
| PART NO. | SCT2542H-XXP |
| TITLE: | AMP280358 HOUSING |
| DRAWING NO. | SCT2542 |