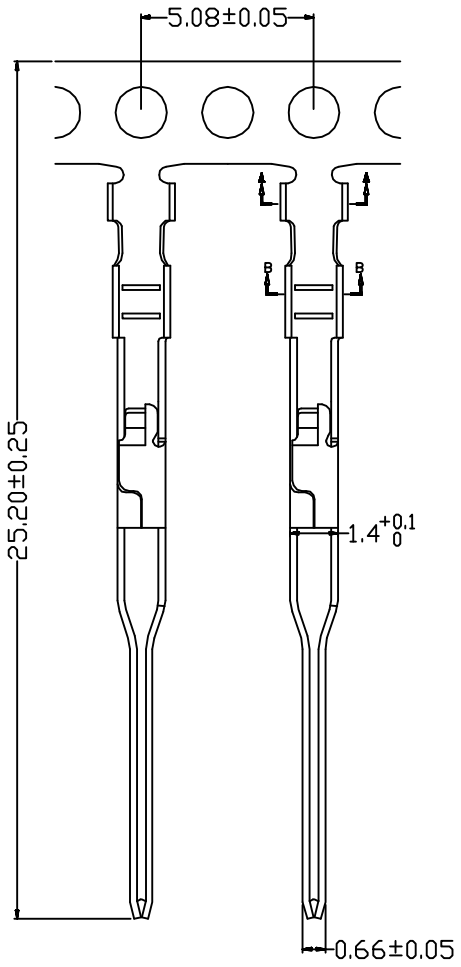

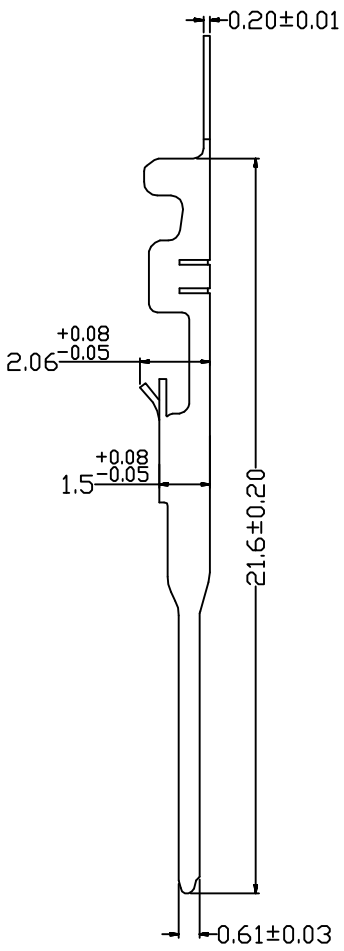

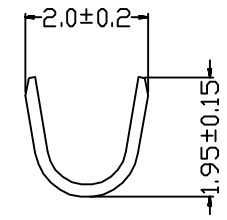

SEC A—A

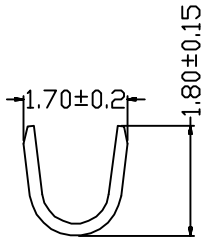

SEC B—B

SPECIFICATIONS

Voltage Rating:250V AC/DC
Current Rating:2A AC/DC
Withstanding Voltage:500V AC/minute
Insulation Resistance:1000MΩ min.
Temperature Range:-25° C - +85° C
Contact Resistance:20mΩ max

TERMINAL
Part No:SCT2544MT
Wire Range:AWG#18-#22(OD2.1mm)
Material:Phosphor Bronze
Finish:Tin Plated
Q`TY:10,000PCS/Reel

REV	DATE	MODIFICATION DESCRIPTION	CHANGE	APPROVE
0	05/12/27	NEW	———	———

OPERATION	
~ 10	±0.15
20 ~ 30	±0.30
30 ~	±0.50
Angle	± 2°
DIM	TOL

DRAW	YANG	2015.10.22
DESIGN		
CHECK	Micky.Liu	2015.10.22
APPROVE	Hellen.Li	2015.10.22

SCALE	
UNIT	mm
SIZE	A4
SHEET	1/1
PROJ.	

SCONDAR 森康达电子有限公司
SCONDAR ELECTRONIC LIMITED

PART NO.	SCT2544MT
TITLE:	PITCH 2.5TERMINAL
DRAWING NO.	SCT2544MT