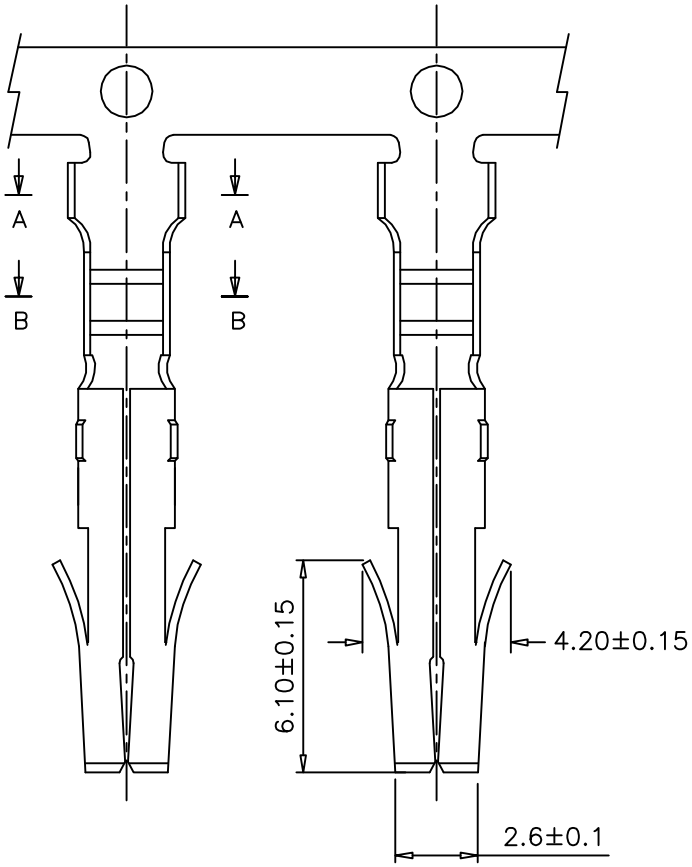

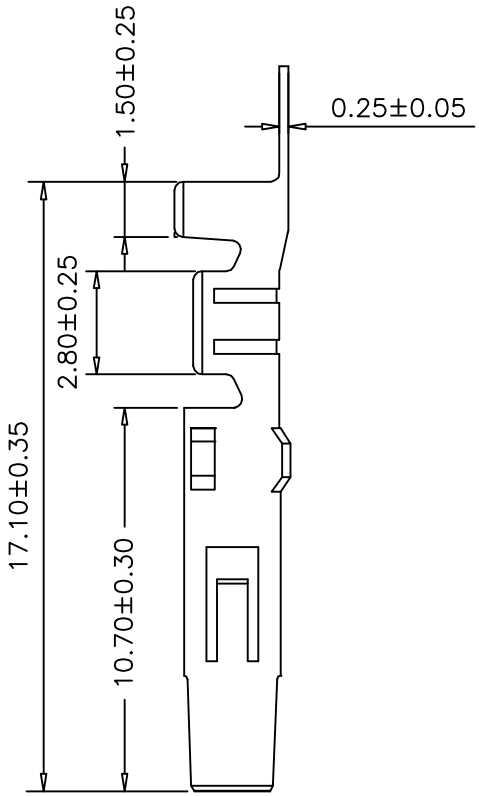

SPECIFICATIONS
Voltage Rating: 250V AC/DC
Current Rating: 10A AC/DC
Withstanding Voltage: 1500V AC/minute
Insulation Resistance: 1000MΩ min.
Temperature Range: -25° C - +85° C
Contact Resistance: 20mΩ max

TERMINAL
Part No: SCT5083FTH
Wire Range: AWG#14-#20 (OD3.3mm max)
Material: Brass
Finish: Tin plated
Thickness: 0.25
Q'TY: 6,000PCS/Reel

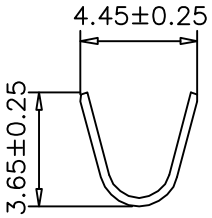

A–A

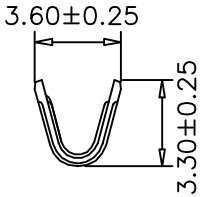

B–B

REV	DATE	MODIFICATION DESCRIPTION	CHANGE	APPROVE
0	05/12/27	NEW	———	———

OPERATION	
~ 10	±0.15
20 ~ 30	±0.30
30 ~	±0.50
Angle	± 2°
DIM	TOL

DRAW	JULIE	2016.11.14
DESIGN		
CHECK	MICKY	2016.11.15
APPROVE	HELLEN	2016.11.15

SCALE	
UNIT	mm
SIZE	A4
SHEET	1/1
PROJ.	

SCT 森康达电子有限公司
S'CONDAR ELECTRONIC LIMITED

PART NO.	SCT5083FTH
TITLE:	MOLEX8981 FEMALE Terminal
DRAWING NO.	SCT5083