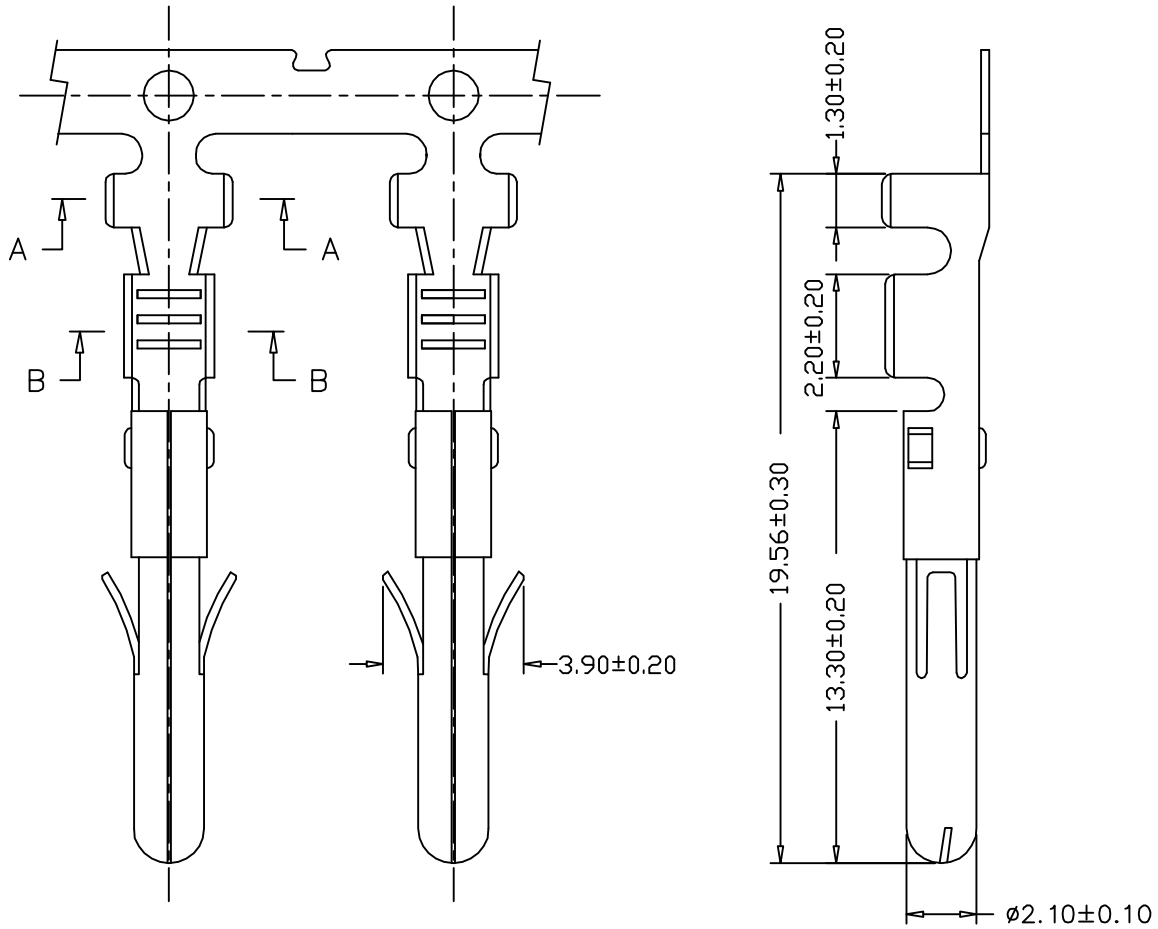

SPECIFICATIONS
Voltage Rating: 250V AC/DC
Current Rating: 10A AC/DC
Withstanding Voltage: 1500V AC/minute
Insulation Resistance: 1000MΩ min.
Temperature Range: -25° C - +85° C
Contact Resistance: 20mΩ max

TERMINAL
Part No: SCT5083MT
Wire Range: AWG#14-#20 (OD3.3mm max)
Material: Brass
Finish: Tin plated
Thickness: 0.25
Q'TY: 8,000PCS/Reel

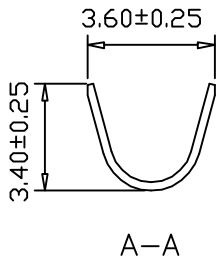

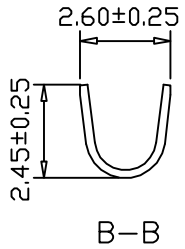

REV	DATE	MODIFICATION DESCRIPTION	CHANGE	APPROVE
0	05/12/27	NEW	——	——

OPERATION			
DRAW	YANG	2015.09.15	
DESIGN			
CHECK	MICKY	2015.09.15	
APPROVE	HELLEN	2015.09.15	

~ 10	±0.15
20 ~ 30	±0.30
30 ~	±0.50
Angle	± 2°
DIM	TOL

SCALE	
UNIT	mm
SIZE	A4
SHEET	1/1
PROJ.	

SCONDAR 森康达电子有限公司 SCONDAR ELECTRONIC LIMITED

PART NO.	SCT5083MT
TITLE:	MOLEX8981 MALE Terminal
DRAWING NO.	SCT5083