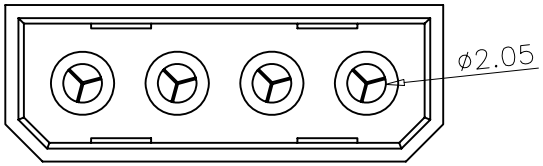

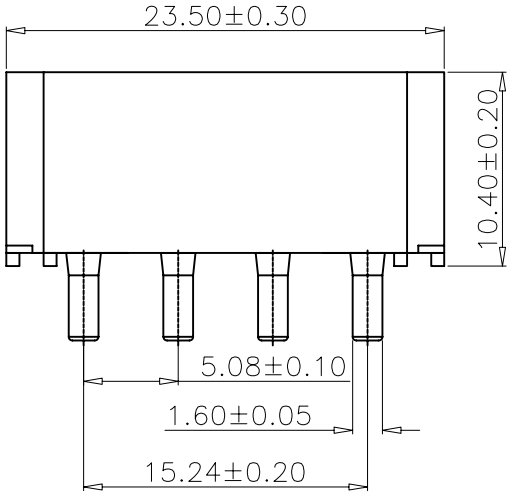

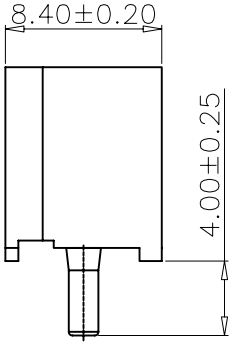

SPECIFICATIONS
Voltage Rating: 250V AC/DC
Current Rating: 10A AC/DC
Withstanding Voltage: 1500V AC/minute
Insulation Resistance: 1000MΩ min.
Temperature Range: -25° C - +85° C
Contact Resistance: 20mΩ max

WAFER
Part No: SCT5083WVA-04P
Material: Nylon 66, UL94V-2
Pin: Brass, Tin plated

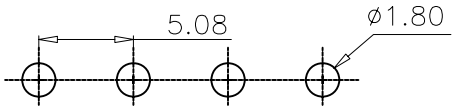

P.C.B LAYOUT

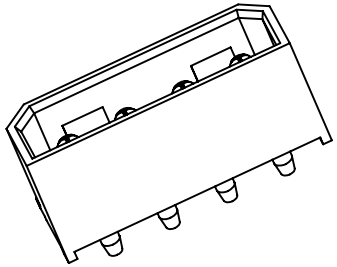

REV	DATE	MODIFICATION DESCRIPTION	CHANGE	APPROVE
0	05/12/27	NEW	———	———

OPERATION	
~ 10	±0.15
20 ~ 30	±0.30
30 ~	±0.50
Angle	± 2°
DIM	TOL

DRAW	SIMON	2015.01.19
DESIGN		
CHECK	MICKY	2015.01.19
APPROVE	HELLEN	2015.01.19

SCALE	
UNIT	mm
SIZE	A4
SHEET	1/1
PROJ.	

SCONDAR 森康达电子有限公司
SCONDAR ELECTRONIC LIMITED

PART NO.	SCT5083WVA-04P
TITLE:	MOLEX8981 180C WAFER
DRAWING NO.	SCT5083