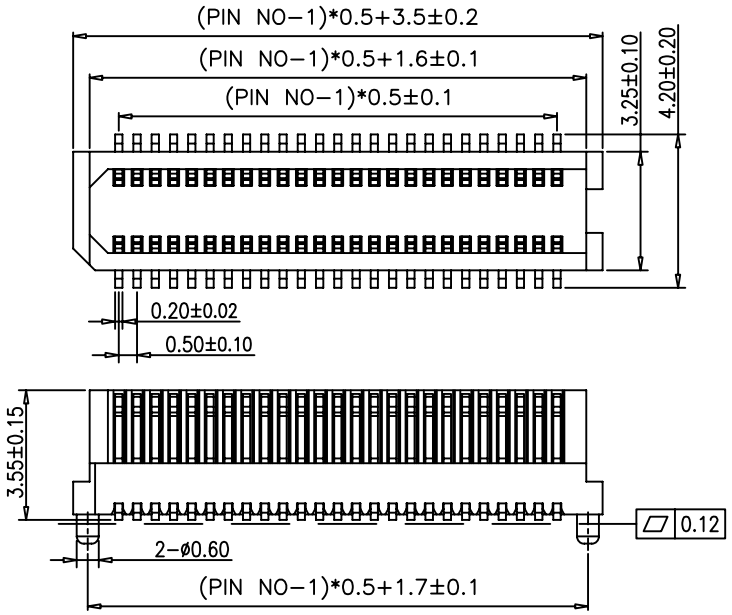

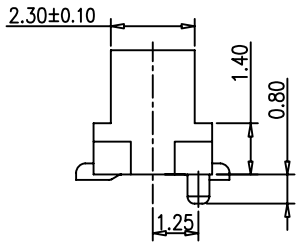

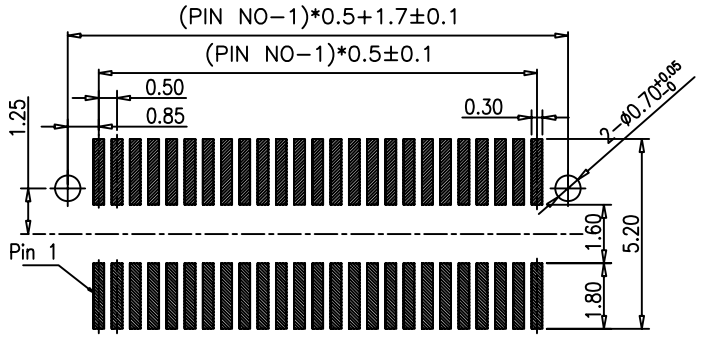

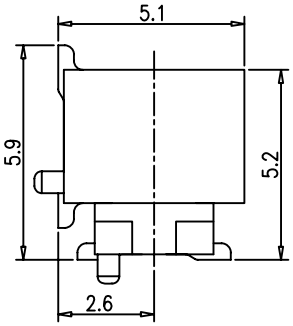

MATING VIEW

SPECIFICATIONS

Voltage Rating: 50V AC/DC
Current Rating: 0.5A AC/DC
Withstanding Voltage: 500V AC/minute
Insulation Resistance: 500MΩ min.
Temperature Range: -25° C - +85° C
Contact Resistance: 30mΩ max
Poles: 2*4-2*30P

MATERIAL

1. Material: Base: LCP, UL94V-0
2. Contact: Phosphor bronze
3. Finish: Gold Plated

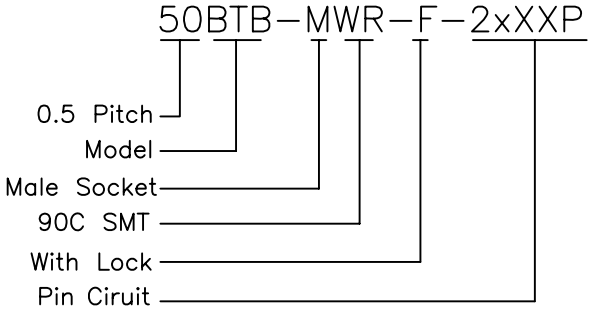

REV	DATE	MODIFICATION DESCRIPTION	CHANGE	APPROVE
0	05/12/27	NEW		

OPERATION				
~ 10	±0.15	DRAW	CHENA	14/09/18
20 ~ 30	±0.30	DESIGN		
30 ~	±0.50	CHECK	Micky	14/09/18
Angle	± 2°	APPROVE	HELLEN	14/09/18
DIM	TOL			

SCALE	
UNIT	mm
SIZE	A4
SHEET	1/1
PROJ.	

SCONDAR 森康达电子有限公司
SCONDAR ELECTRONIC LIMITED

PART NO.	50BTB-MWR-F-2xXXP
TITLE:	0.5 Board to board 180C SMT Male Socket
DRAWING NO.	50BTB-MWR-F-2xXXP