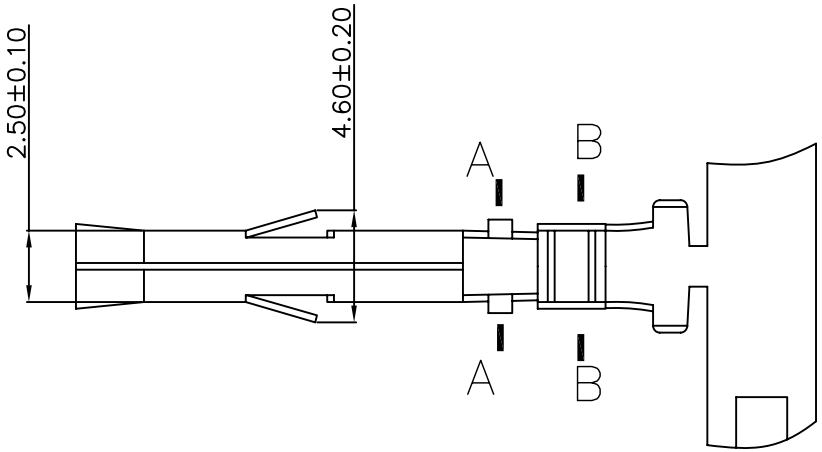

TERMINAL
-Part No.:SCT6200FT
-Material:0.25mm Brass Tin-Plated
-Use with:SCT6200MH-02

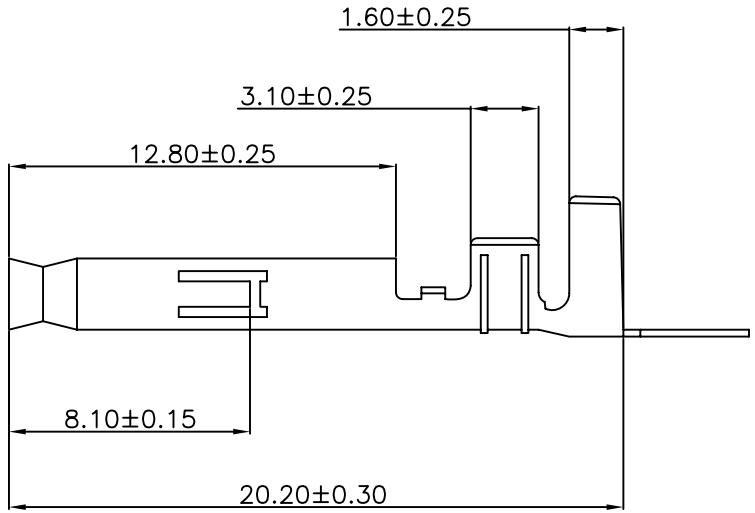

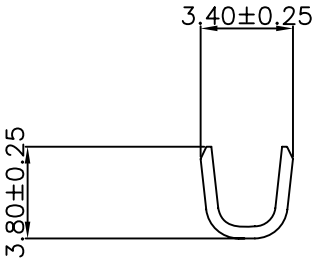

SECTION A-A

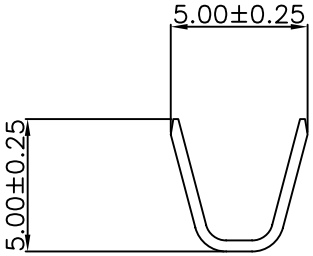

SECTION B-B

REV	DATE	MODIFICATION DESCRIPTION	CHANGE	APPROVE
0	05/12/27	NEW		

OPERATION	
~ 10	±0.15
20 ~ 30	±0.30
30 ~	±0.50
Angle	± 2°
DIM	TOL

DRAW	Micky.Liu	2006/05/02
DESIGN		
CHECK	Judy.Huang	2006/05/02
APPROVE	Hellen.Li	2006/05/02

SCALE	
UNIT	mm
SIZE	A4
SHEET	1/1
PROJ.	

SCONDAR 森康达电子有限公司
SCONDAR ELECTRONIC LIMITED

PART NO.	SCT6200-FT
TITLE:	EL6.2 TIN FEMALE TERMINAL
DRAWING NO.	SCT6200